A:	TAG#	AREA / LOCATION:	**BUTTERFLY VALVE (SHORT BODY)**
B:			
C:			
D:			
E:			
F:			
G:			
J:			
K:			
L:			

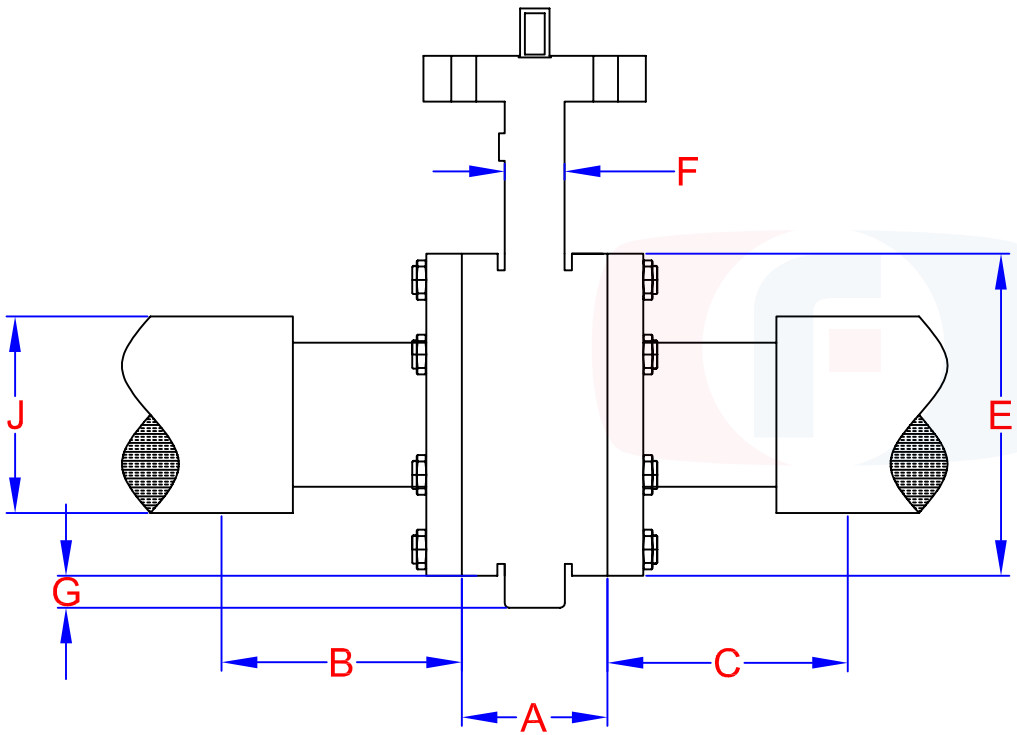

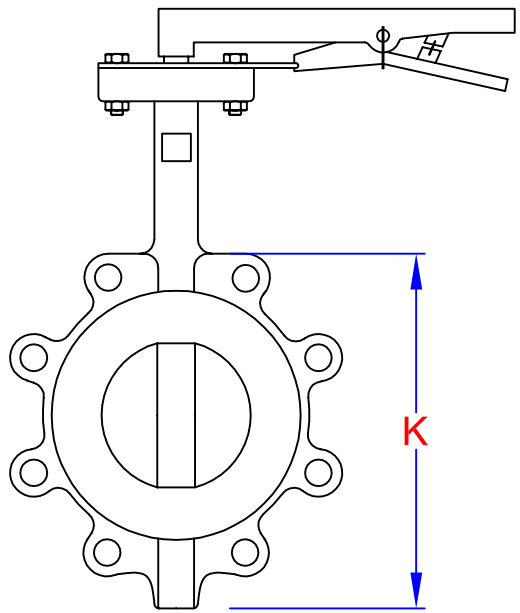

CUSTOMER:			BONNET REQUIRED? Y / N	firwin We've Got You Covered 225 LIMESTONE CRESCENT, NORTH YORK, ON M3J 2R1, CANADA T: (416) 745-9389 F: (416) 745-0782
SIZE:	CLASS:	MAKE:	MODEL:	
ITEM TEMPERATURE	INSULATION THICKNESS "	OUTER COVER MATERIAL	INNER COVER MATERIAL	DATE:
END FLAPS Y / N	CLOSURE FLAPS Y / N	DRAW STRINGS Y / N	BELTS AND D-RINGS Y / N	MEASURED BY: